## CHC 20 (CHC16) P (IEC)

### INPUT

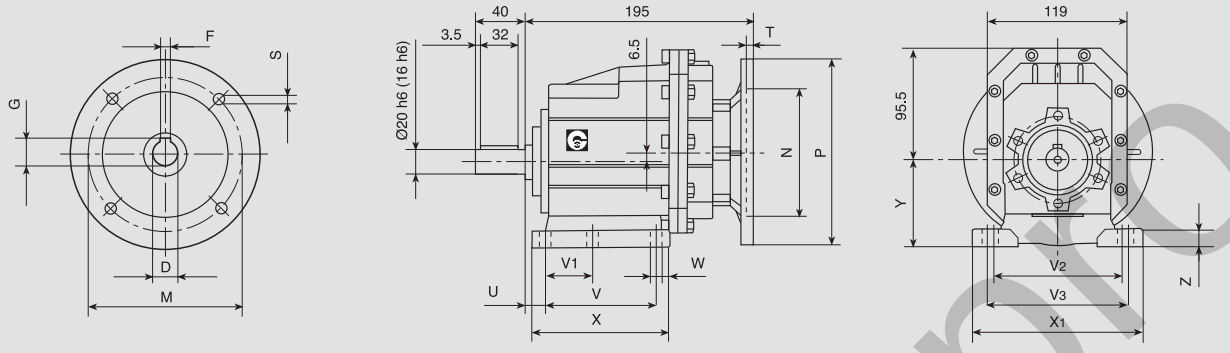


## CHC 20 (CHC16) F (IEC)

### OUTPUT

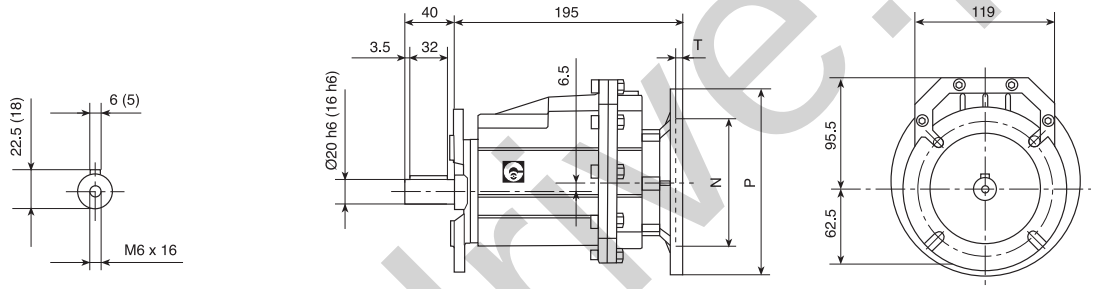


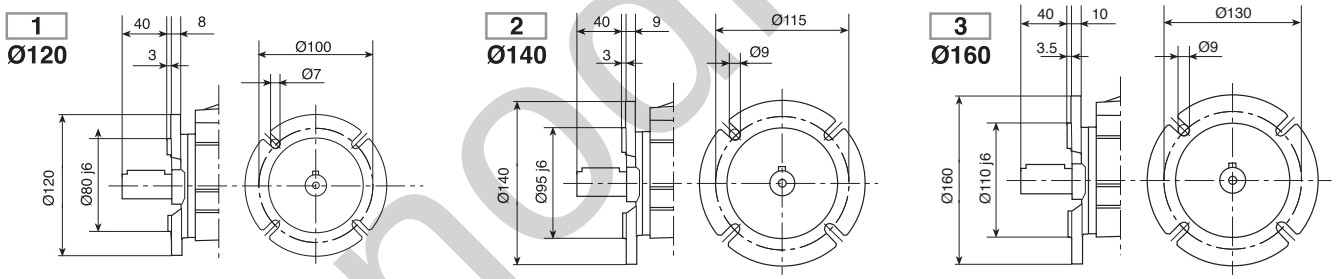


## CHC 20 (CHC16) (IEC)

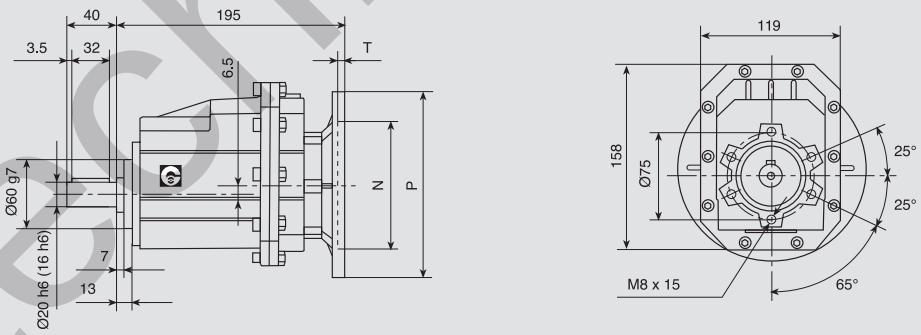


(CHC16) On request

**kg. 4,7**

| IEC | D | F | G | P | M | N | S | T |
|---|---|---|---|---|---|---|---|---|
| **63B5** | 11 | 4 | 12.8 | 140 | 115 | 95 | 9 | 5 |
| **71B5** | 14 | 5 | 16.3 | 160 | 130 | 110 | 9 | 5 |
| **71B14** | 14 | 5 | 16.3 | 105 | 85 | 70 | 7 | 5 |
| **80B5** | 19 | 6 | 21.8 | 200 | 165 | 130 | 11 | 5 |
| **80B14** | 19 | 6 | 21.8 | 120 | 100 | 80 | 7 | 5 |

| Foot cod. | U | V | $V_1$ | $V_2$ | $V_3$ | W | X | $X_1$ | Y | Z |
|---|---|---|---|---|---|---|---|---|---|---|
| **B** | 18 | 87 | 50 | 110 | - | 9 | 118 | 130 | 85 | 15 |
| **M** | 18 | 80 | - | 110 | 120 | 9 | 118 | 145 | 75 | 15 |

*2D and 3D drawings available on the web site* ***www.chiaravalli.com***
*Quantity, availability and prices with Chiaravalli B2B*

technodrive.pro



ООО "Технодрайв" тел.: 8(863) 223-20-99 email: info@technodrive.net http://technodrive.pro

## CHC 25 P (IEC)

### INPUT

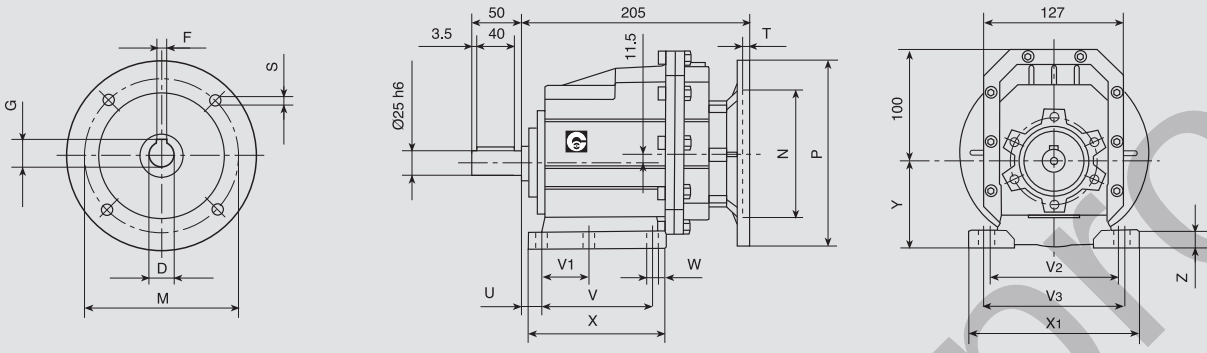


## CHC 25 F (IEC)

### OUTPUT

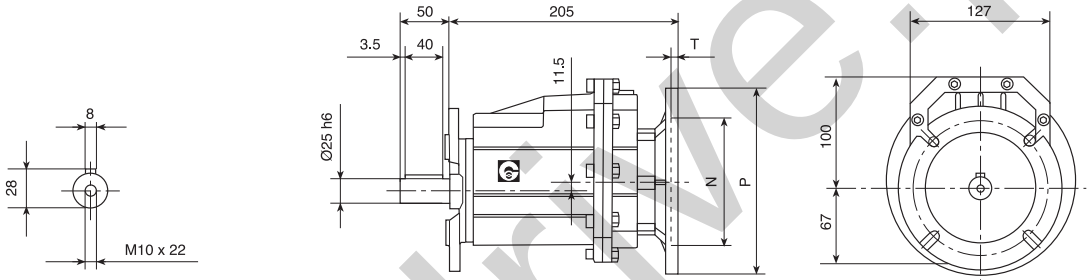


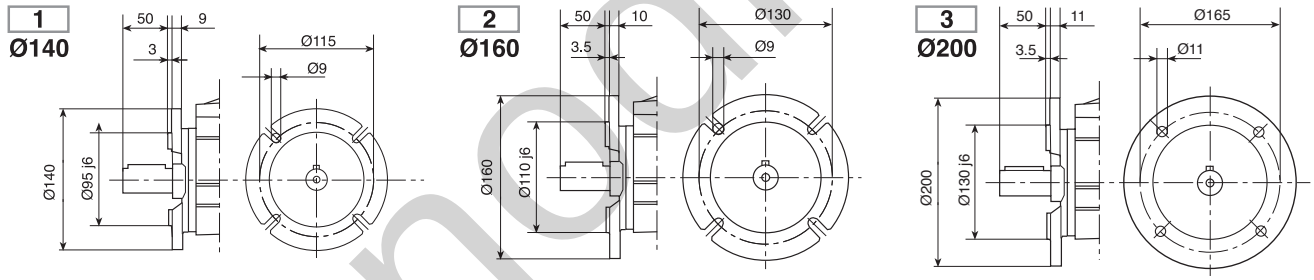


## CHC 25 (IEC)

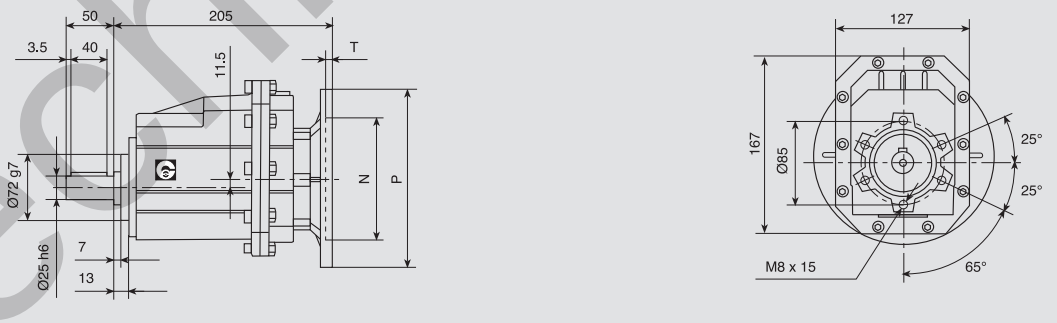


**kg. 5,8**

| Foot cod. | U | V | $V_1$ | $V_2$ | $V_3$ | W | X | $X_1$ | Y | Z |
|---|---|---|---|---|---|---|---|---|---|---|
| **B** | 18 | 107.5 | 60 | - | 130 | 11 | 136 | 155 | 100 | 17 |
| **M** | 25 | 85 | - | 110 | 120 | 9 | 112 | 145 | 80 | 15 |

| IEC | D | F | G | P | M | N | S | T |
|---|---|---|---|---|---|---|---|---|
| **71B5** | 14 | 5 | 16.3 | 160 | 130 | 110 | 9 | 5 |
| **71B14** | 14 | 5 | 16.3 | 105 | 85 | 70 | 7 | 5 |
| **80B5** | 19 | 6 | 21.8 | 200 | 165 | 130 | 11 | 5 |
| **80B14** | 19 | 6 | 21.8 | 120 | 100 | 80 | 7 | 5 |
| **90B5** | 24 | 8 | 27.3 | 200 | 165 | 130 | 11 | 5 |
| **90B14** | 24 | 8 | 27.3 | 140 | 115 | 95 | 9 | 5 |

*2D and 3D drawings available on the web site **www.chiaravalli.com***
*Quantity, availability and prices with Chiaravalli B2B*



technodrive.pro
ООО "Технодрайв" тел.: 8(863) 223-20-99 email: info@technodrive.net http://technodrive.pro

## CHC 30 P (IEC)

### INPUT

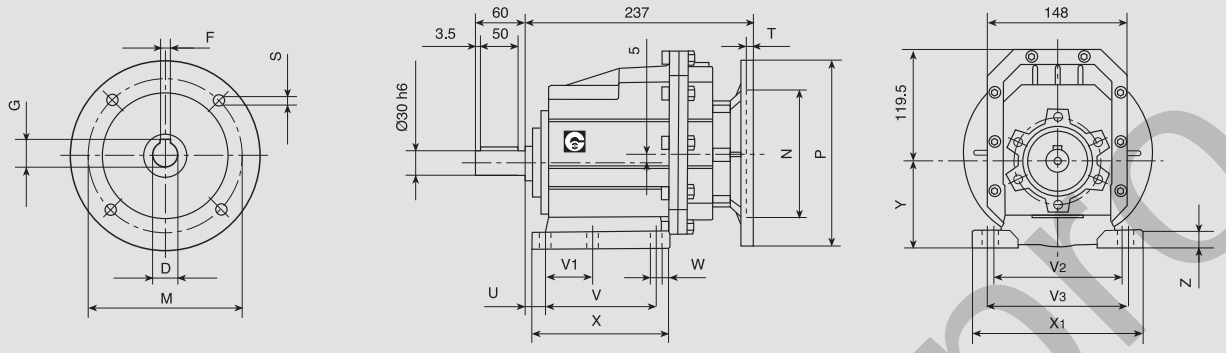


## CHC 30 F (IEC)

### OUTPUT

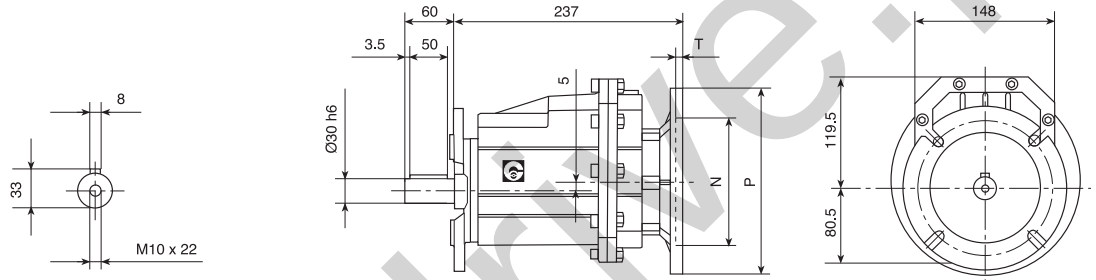


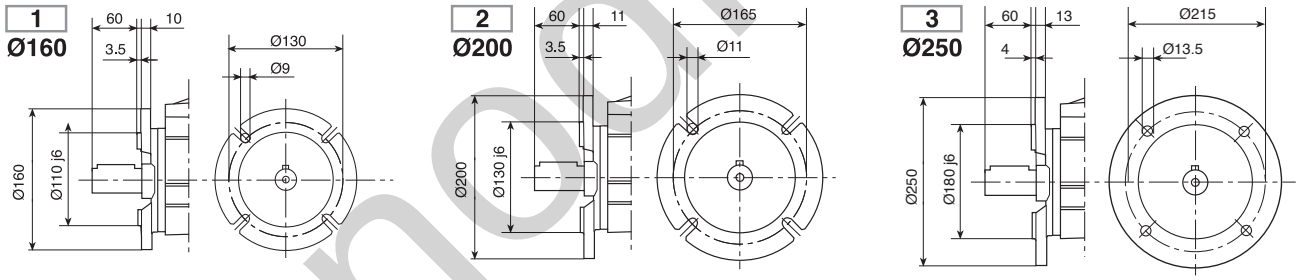


## CHC 30 (IEC)

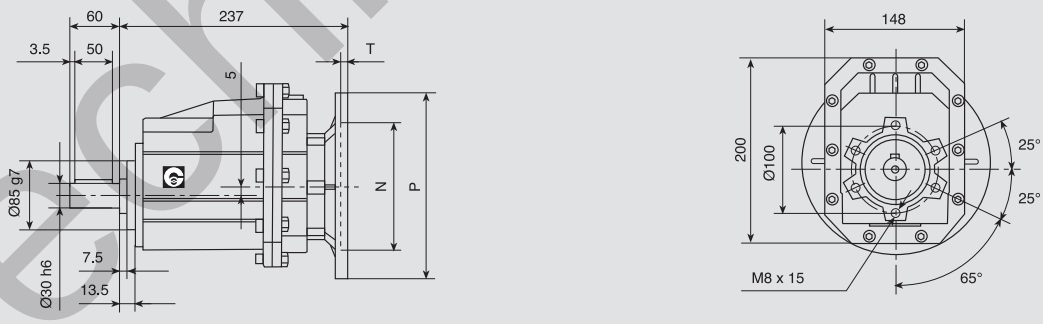


kg. 9,2

| IEC | D | F | G | P | M | N | S | T |
|---|---|---|---|---|---|---|---|---|
| **80B5** | 19 | 6 | 21.8 | 200 | 165 | 130 | 11 | 5 |
| **80B14** | 19 | 6 | 21.8 | 120 | 100 | 80 | 7 | 5 |
| **90B5** | 24 | 8 | 27.3 | 200 | 165 | 130 | 11 | 5 |
| **90B14** | 24 | 8 | 27.3 | 140 | 115 | 95 | 9 | 5 |
| **100/112B5** | 28 | 8 | 31.3 | 250 | 215 | 180 | 13.5 | 5 |
| **100/112B14** | 28 | 8 | 31.3 | 160 | 130 | 110 | 9 | 5 |

| Foot cod. | U | V | $V_1$ | $V_2$ | $V_3$ | W | X | $X_1$ | Y | Z |
|---|---|---|---|---|---|---|---|---|---|---|
| **B** | 18 | 130 | 70 | - | 160 | 11 | 156 | 190 | 110 | 20 |
| **M** | 30 | 100 | - | 135 | 150 | 11 | 150 | 190 | 110 | 18 |

technodrive.pro

## CHC 35 - CHC 40 P (IEC)

### INPUT

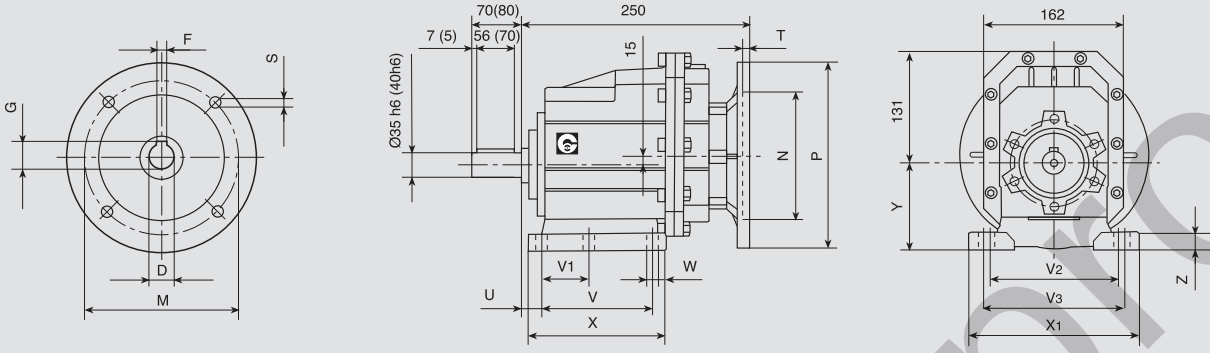


## CHC 35 - CHC 40 F (IEC)

### OUTPUT

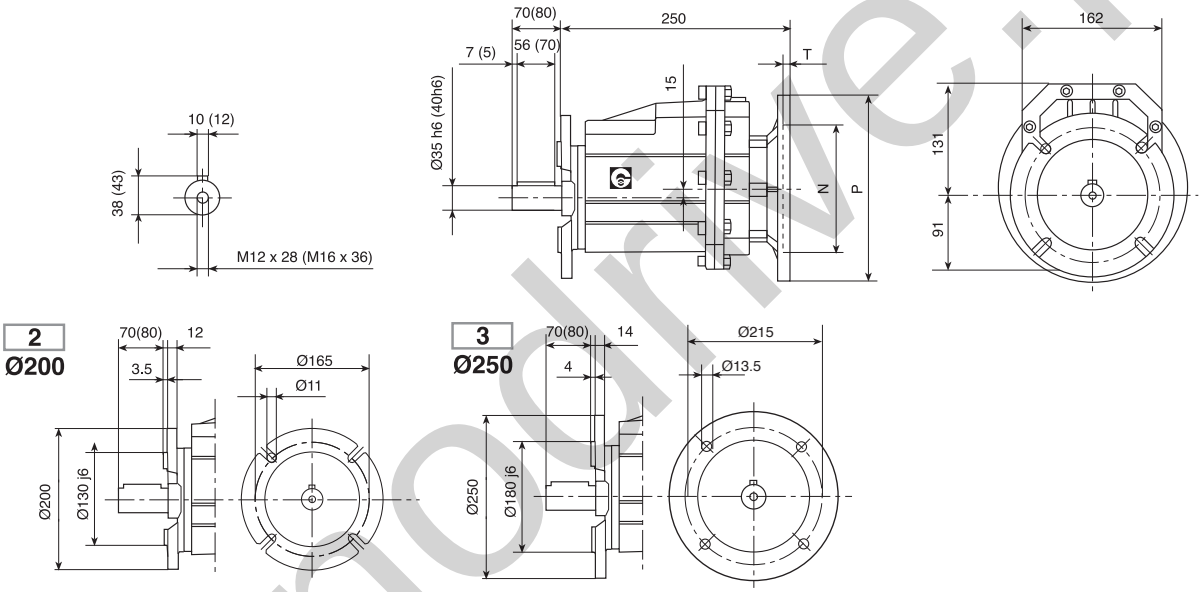


## CHC 35 - CHC 40 (IEC)

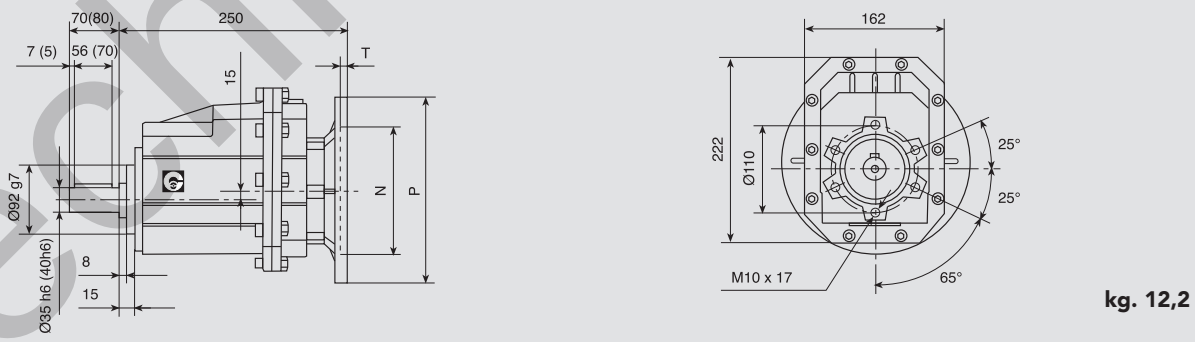


**kg. 12,2**

| Foot cod. | U | V | V1 | V2 | V3 | W | X | X1 | Y | Z |
|---|---|---|---|---|---|---|---|---|---|---|
| **B** | 23.5 | 130 | - | 170 | - | 14 | 168 | 205 | 115 | 20 |
| **C** | 19.5 | 149.5 | - | 180 | - | 14 | 185 | 215 | 130 | 20 |
| **M** | 35 | 110 | - | 170 | 185 | 14 | 150 | 230 | 120 | 20 |

(...) Between brackets CHC 40 dimension

| IEC | D | F | G | P | M | N | S | T |
|---|---|---|---|---|---|---|---|---|
| **80B5** | 19 | 6 | 21.8 | 200 | 165 | 130 | 11 | 5 |
| **80B14** | 19 | 6 | 21.8 | 120 | 100 | 80 | 7 | 5 |
| **90B5** | 24 | 8 | 27.3 | 200 | 165 | 130 | 11 | 5 |
| **90B14** | 24 | 8 | 27.3 | 140 | 115 | 95 | 9 | 5 |
| **100/112B5** | 28 | 8 | 31.3 | 250 | 215 | 180 | 13.5 | 5 |
| **100/112B14** | 28 | 8 | 31.3 | 160 | 130 | 110 | 9 | 5 |

*2D and 3D drawings available on the web site **www.chiaravalli.com***
*Quantity, availability and prices with Chiaravalli B2B*



technodrive.pro
ООО "Технодрайв" тел.: 8(863) 223-20-99 email: info@technodrive.net http://technodrive.pro