RCK 45 TYPE CLAMPING ELEMENTS

NOT SELF CENTERING

THE RECOMMENDED MACHINING TOLERANCES FOR THE PRESSURE SURFACES ARE AS FOLLOWS:

Ø h 8 FOR SHAFT

Ø H 8 FOR HUB

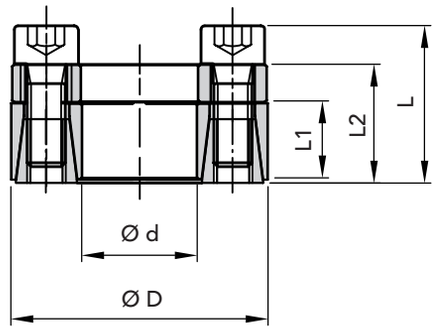

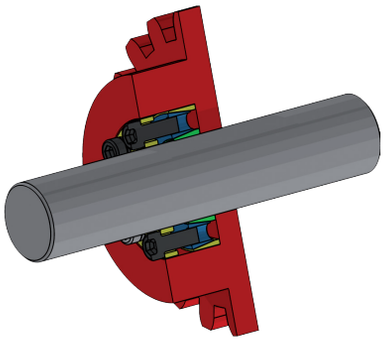

PART NUMBER	DIMENSIONS Ød	ØD	L1	L2	L	maximum torque Mt Nm	CLAMPING PRESSURE Shaft N/mm²	Hub N/mm²	CLAMPING SCREWS DIN 912 MAT. 12.9 N.	Type	Torque Nm	EXTRACTION THREAD Type	N.	WEIGHT Kg
06450018	18	40	12	18,5	24,5	190	260	120	6	M6x16	16	M8	2	0,20
06450019	19	41	12	18,5	24,5	210	260	120	6	M6x16	16	M8	2	0,25
06450020	20	42	12	18,5	24,5	240	250	120	6	M6x16	16	M8	2	0,24
06450024	24	46	12	18,5	24,5	290	250	120	6	M6x16	16	M8	2	0,25
06450025	25	47	12	18,5	24,5	330	230	120	8	M6x16	16	M8	2	0,25
06450028	28	50	12	18,5	24,5	370	220	120	8	M6x16	16	M8	2	0,30
06450030	30	52	12	18,5	24,5	430	210	120	8	M6x16	16	M8	2	0,30
06450035	35	57	15	22	28	610	170	100	12	M6x16	16	M8	3	0,32
06450038	38	60	15	22	28	680	170	100	12	M6x16	16	M8	3	0,36
06450040	40	62	15	22	28	780	170	100	12	M6x16	16	M8	3	0,40
06450042	42	70	18	28	36	1480	190	110	12	M8x22	41	M10	3	0,45
06450045	45	73	18	28	36	1500	210	130	12	M8x22	41	M10	3	0,57
06450048	48	76	18	28	36	1550	210	130	12	M8x22	41	M10	3	0,59
06450050	50	78	18	28	36	1650	190	120	12	M8x22	41	M10	3	0,61
06450055	55	83	18	28	36	2000	190	120	16	M8x22	41	M10	4	0,63
06450060	60	88	18	28	36	2350	190	120	16	M8x22	41	M10	4	0,69
06450070	70	105	22	35	35	3900	180	120	12	M10x25	70	M12	3	1,25
06450080	80	115	22	35	35	4800	170	120	16	M10x25	70	M12	4	1,40

ORDERING EXAMPLE:

The following will be ordered with a shaft having Ød 55 with a torque value less than or equal 2000 Nm:

RCK 45 - 55 x 83

Part Number 06450055

CAD drawings available on our site

www.chiaravalli.com

3D simulation available on the website.
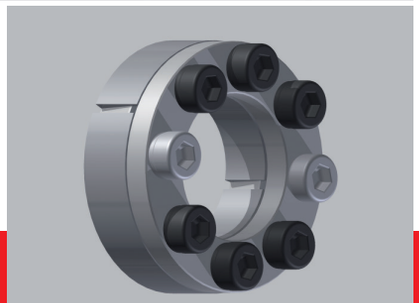
Quantity, availability and prices on B2B Chiaravalli